SY32 Synchronous motor 4 / 7 mNm

Dimensional drawing

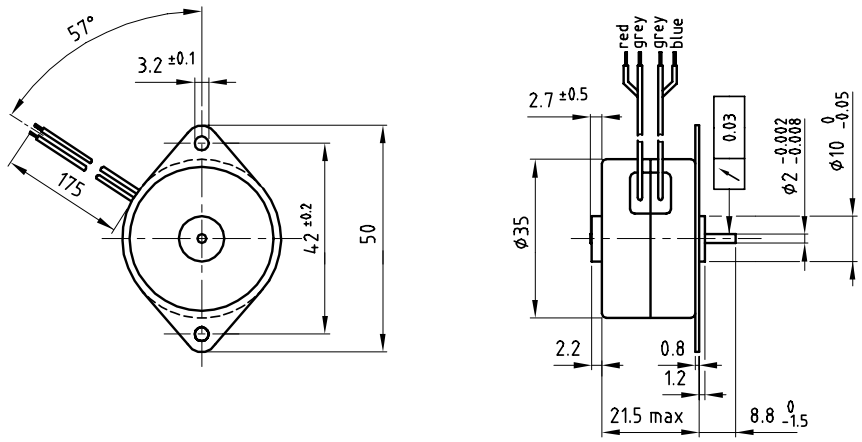

Motor data

Motor order number	9904 111 +		32511	32411	32311	32511	32411	32311
			Coils in parallel			Coils in series		
Nominal Voltage		[V]	24	48	110/117	48	110/117	220
Frequency		[Hz]	50 / 60	50 / 60	50 / 60	50 / 60	50 / 60	50 / 60
Speed		[rpm]	250 / 300	250 / 300	250 / 300	250 / 300	250 / 300	250 / 300
Current		[mA]	35	18	8	35	18	8
Input Power		[W]	0.8	0.8	0.8	1.7	1.7	1.7
Working Torque		[mNm]	4	4	4	7	7	7
Torque derating		[%/K]	-0.4	-0.4	-0.4	-0.4	-0.4	-0.4
Temperature rise of the motor		[°C]	30	30	30	50	50	50
Required phasing capacitor C (MKT-type)	Capacity	[uF]	2.2	0.56	0.1	4.7	1 ×	0.22
	Permissible a.c. voltage	[V]	≥63	≥100	≥250	≥63	≥100	≥250

× For 60 Hz operation, resistor 680 Ohm (0.5 W) required between the points a and b, see Electrical Connection

Electrical Connection

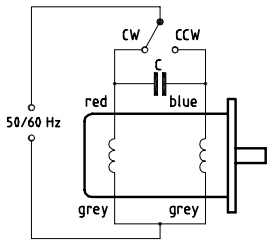

Coils in parallel

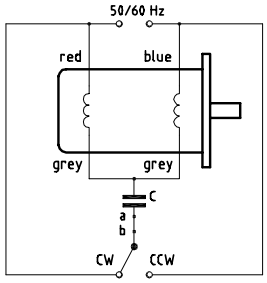

Coils in series

General data

×	Permissable voltage fluctuations	-15 to +10	%
×	Type of bearings	sleeve	
×	Maximum radial load	2.5	N
×	Maximum axial load	0.75	N
×	Ambient temp. range operating	-20/+60	°C
×	Ambient temp. range storage	-40/+100	°C
×	Mass of motor	80	g

Performance curve

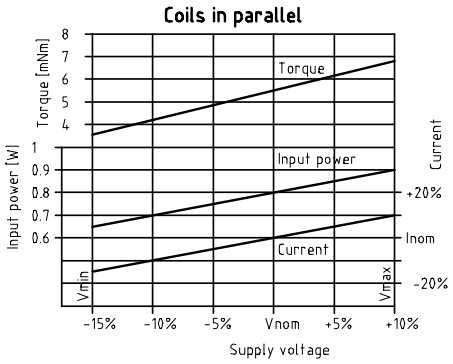

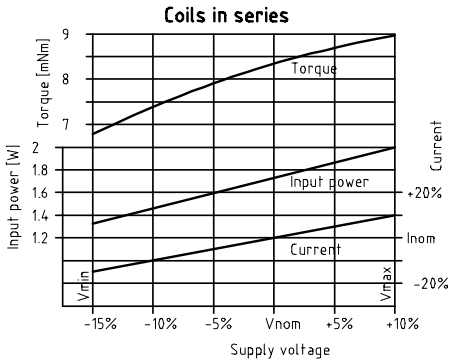

Product combinations

- × Gearbox S49A
- × Gearbox S52A
- × Gearbox S70A

PREMOTEC
PRECISION MOTOR TECHNOLOGY BV
Internet : www.premotec.com - E-mail : sales@premotec.com
Precision Motor Technology b.v. - Kerkeplaat 16 - 3313 LC - Dordrecht - The Netherlands - Tel.: +31 78 621 99 40 - Fax.: +31 78 621 48 28

2000-06-30 / subject to change